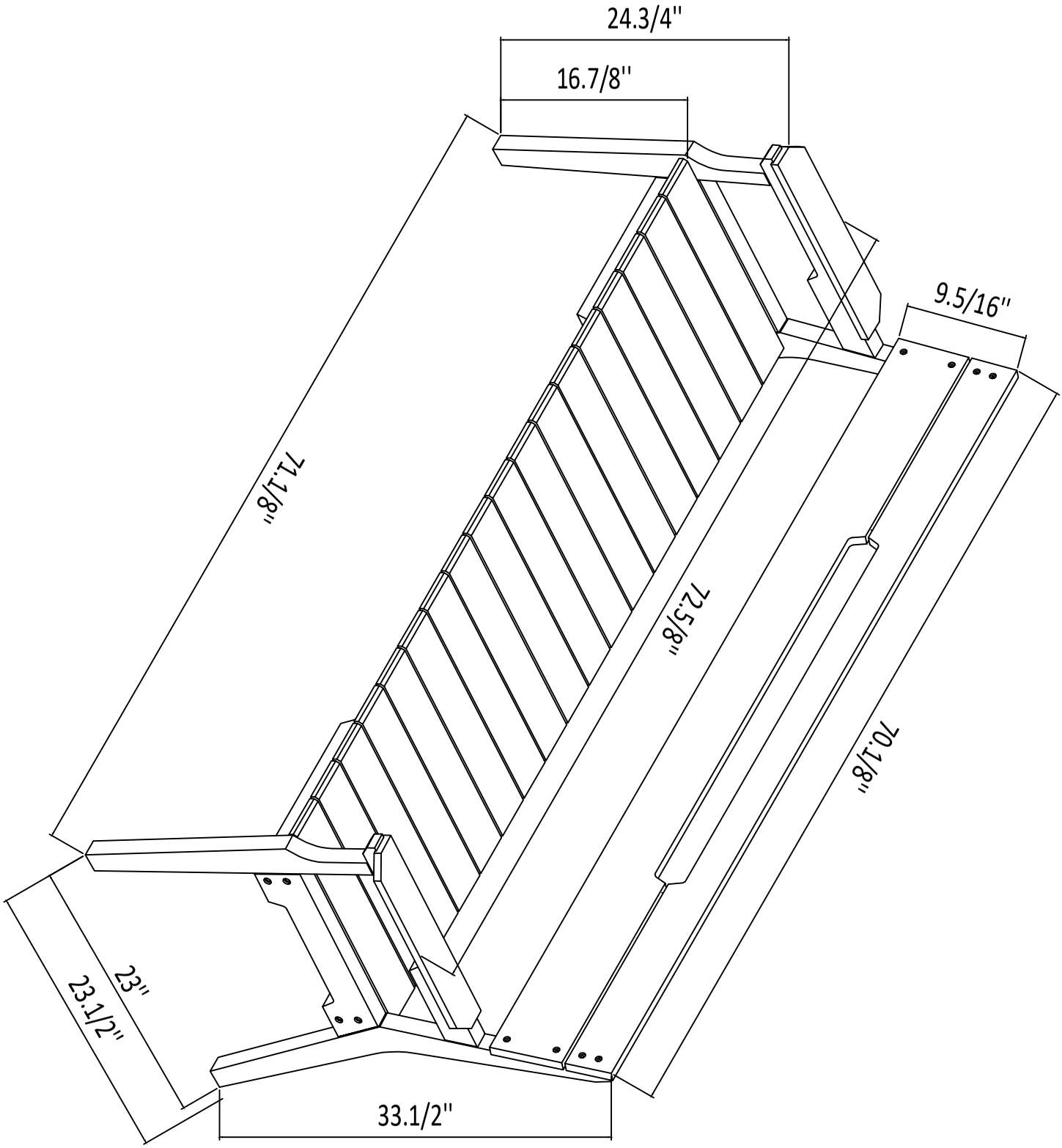
24.3/4"
16.7/8"
9.5/16"
71.1/8"
72.5/8"
70.1/8"
23"
23.1/2"
33.1/2"